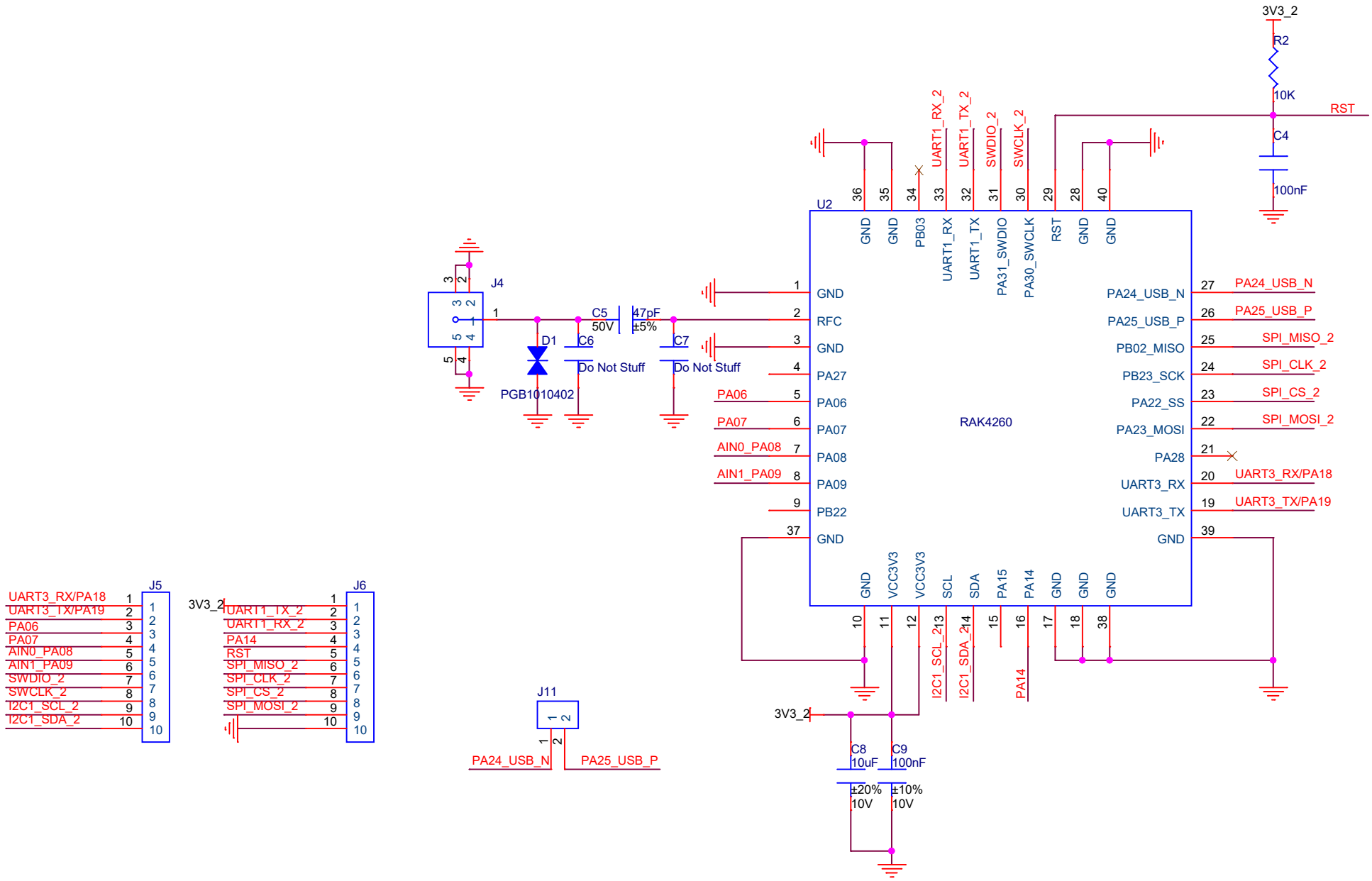

RAK42xxbreakoutboradV1.0

Title		
Size A4	Document Number <Doc>	Rev C
Date: Saturday, September 21, 2019	Sheet 3 of 4	